SETUP SHEET

Name: Bibi49 (LEBLANC Sylvain) | Date: 12/05/13 | Event: Open Fontenay le compte L17

Track Conditions: Outdoor ☑ Open ☑ Loose/Loamy ☐ Dusty ☐ High Bite ☐ Low Bite ☐ Rough ☐
Indoor ☐ Tight ☐ Smooth ☐ Hard Packed ☐ Wet ☐ Dry ☐ Med Bite ☐ Blue Groove ☐

BUMPSTEER/ACKERMANN/SERVO SAVER

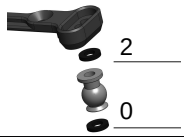

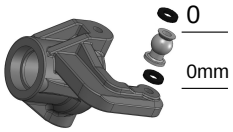

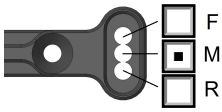

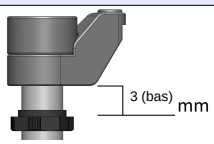

SHOCKS

	Front	Rear
Piston	8x1.3K	8x1.3K
Oil	35	30
Bladder	stock	stock
Spring	2 Xray	yellow
Length/ Droop	106	121

FRONT

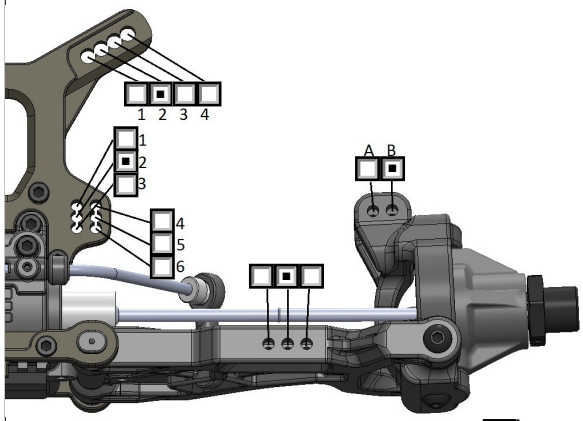

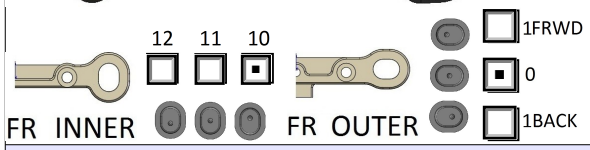

SUSPENSION

	Front	Rear
Ride Height	25	27
Camber	-2	-3
Toe	+1	-3.5
Sway Bar	2.4	2.6

WING

Brand: ☐ ☐ ☐

Type:

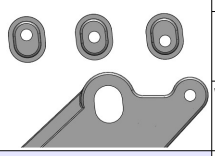

TIRES

	Front	Rear
Brand	AKA City block	AKA IBEAM
Compound	Soft	Soft
Insert	red	red
Wheel	AKA	AKA

REAR

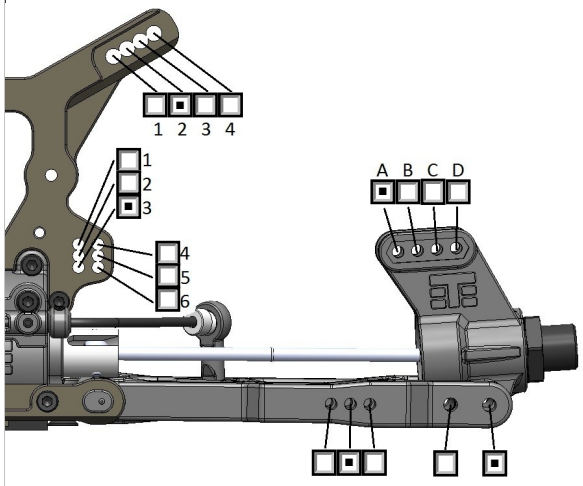

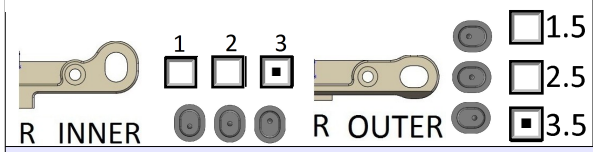

BRACES

☑ Front ☐ Middle ☐ Rear
(Front is always recommended)

WHEELBASE

5 mm 0 mm

F R

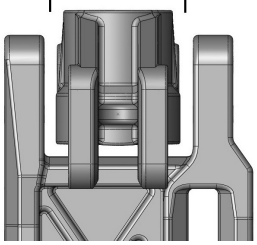

DIFFS

Front	Center	Rear
7	5	5

ELECTRONICS

ESC: Tekin RX8
Battery: Kypom 4S
Servo(s): Futaba Bls351
Radio: SanwaExces
Motor: Tekin 1900 Buggy

DRIVETRAIN

Gear Ratio: 19 / 44

☑ Pinion ☐ Long Shank
☐ Traktion ☐ Clutch
☐ Mech. Brake
☑ Motor Brake

Spur: ☐ Metal ☑ Plastic
Shoes:
Springs:
Radio Notes:

Notes:

NOTES:

- joints de corps/bouchons d'amortisseurs supprimés
- triangles repercés à 4.1mm
- prise de carrossage AR à l'enfoncement augmentée
- pour piste plutôt dégradée : amortisseurs redressés sur les triangles, -2° de carrossage AV