SETUP SHEET

Name: Bibi49 (LEBLANC Sylvain) | Date: 16/09/12 | Event: GP d'Ancinnes

Track Conditions: Outdoor ☑ Open ☑ Loose/Loamy ☐ Dusty ☐ High Bite ☐ Low Bite ☐ Rough ☐
Indoor ☐ Tight ☐ Smooth ☐ Hard Packed ☐ Wet ☐ Dry ☐ Med Bite ☐ Blue Groove ☐

BUMPSTEER/ACKERMANN/SERVO SAVER

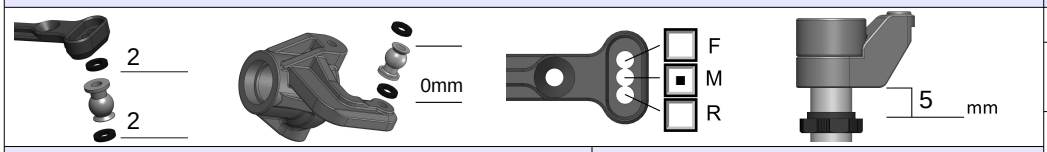

SHOCKS

	Front	Rear
Piston	stock	stock
Oil	40	30
Bladder	stock	stock
Spring	yellow	yellow
Length/ Droop	105	120

FRONT

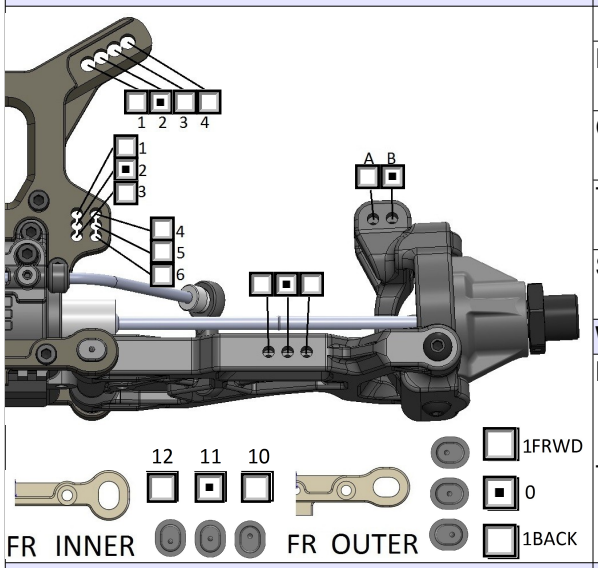

SUSPENSION

	Front	Rear
Ride Height	25	28
Camber	-2	-3
Toe	+1	-3.5
Sway Bar	2.3	2.4

WING

Brand: ☐ ☐ ☐

Type:

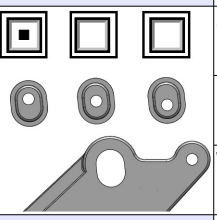

TIRES

	Front	Rear
Brand	ProCircuit	sweet shot
Compound	soft	soft
Insert		
Wheel		

REAR

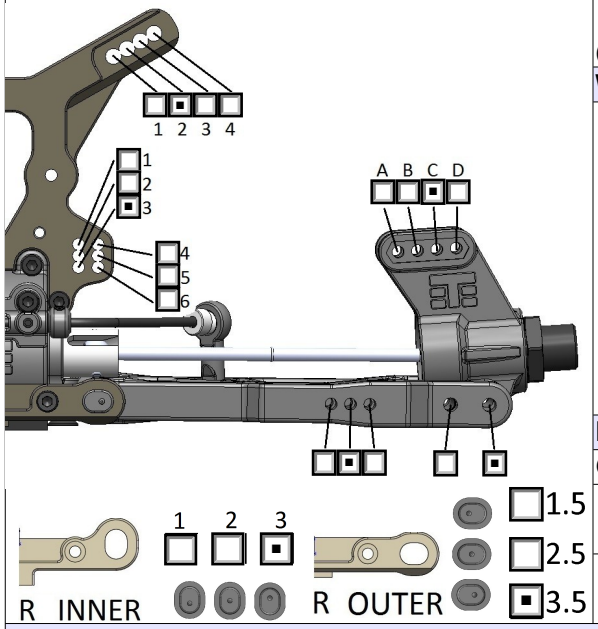

BRACES

☑ Front ☑ Middle ☑ Rear
(Front is always recommended)

Notes:

WHEELBASE

5 mm 0 mm

F R

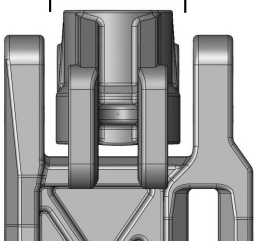

DIFFS

Front	Center	Rear
5	5	3

ELECTRONICS

ESC: Tekin RX8
Battery: Kypom/Desir Power 4S
Servo(s): Futaba Bls451
Radio: SanwaExces
Motor: Tekin 2050 Buggy

DRIVETRAIN

Gear Ratio: 17 / 44

☐ Pinion ☐ Long Shank
☐ Traktion ☐ Clutch
☐ Mech. Brake
☐ Motor Brake

Spur: ☐ Metal ☐ Plastic
Shoes:
Springs:
Radio Notes:

NOTES:

- rotules de direction inversées (tête en bas) astuce Tekno RC
- joints de corps/bouchons d'amortisseurs supprimés
- triangles repercés à 4.1mm