SETUP SHEET

Name: | Date: | Event:

Track Conditions: Outdoor ☐ Open ☐ Loose/Loamy ☐ Dusty ☐ High Bite ☐ Low Bite ☐ Rough ☐
Indoor ☐ Tight ☐ Smooth ☐ Hard Packed ☐ Wet ☐ Dry ☐ Med Bite ☐ Blue Groove ☐

BUMPSTEER/ACKERMANN/SERVO SAVER

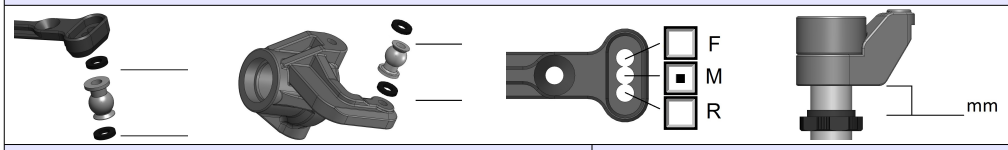

SHOCKS

	Front	Rear
Piston		
Oil		
Bladder		
Spring		
Length/ Droop		

FRONT

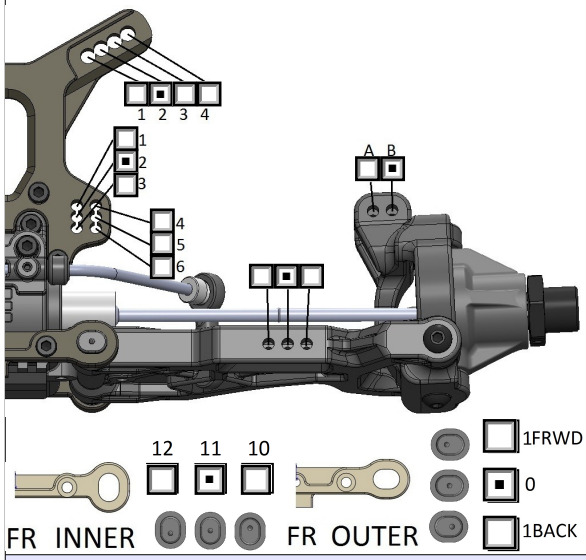

SUSPENSION

	Front	Rear
Ride Height		
Camber		
Toe		
Sway Bar		

TIRES

	Front	Rear
Brand		
Compound		
Insert		
Wheel		

WING

Brand:

Type:

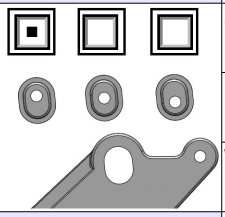

REAR

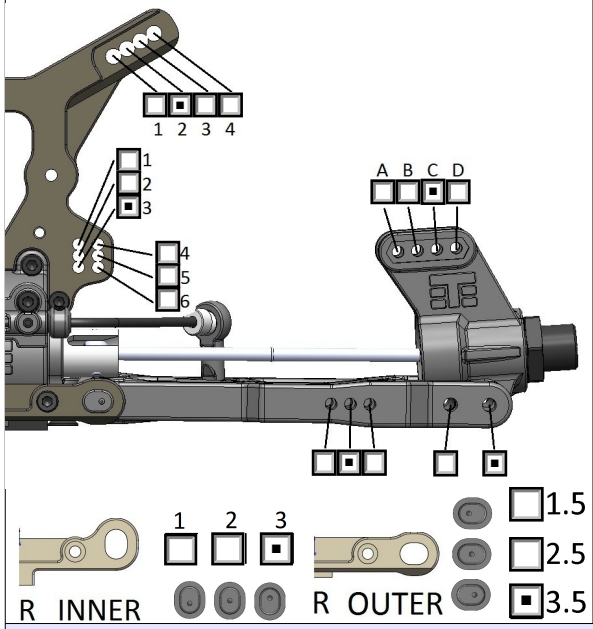

BRACES

☐ Front ☐ Middle ☐ Rear
(Front is always recommended)

Notes:

WHEELBASE

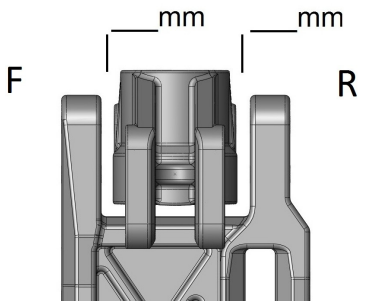

DIFFS

Front	Center	Rear

ELECTRONICS

ESC:
Battery:
Servo(s):
Radio:
Motor:

DRIVETRAIN

Gear Ratio: _____/_____

☐ Pinion ☐ Long Shank
☐ Traktion ☐ Clutch

☐ Mech. Brake
☐ Motor Brake

Spur: ☐ Metal ☐ Plastic
Shoes:
Springs:

Radio Notes:

NOTES: